Sentinel Connector Systems Inc.

1953 Stanton Street
York, Pa. 17404

PART NO.: B00056L

* FOR USE WITH SPECIFIC LOAD BAR STYLE RJ-45 PLUGS
* OPENING TO ACCEPT CABLES TO 6.7mm
* THIS PART IS CLEAR IN COLOR
* THIS PART HAS NO LOGO

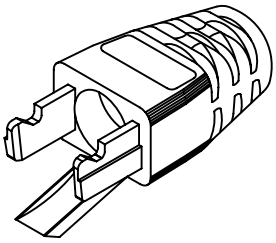

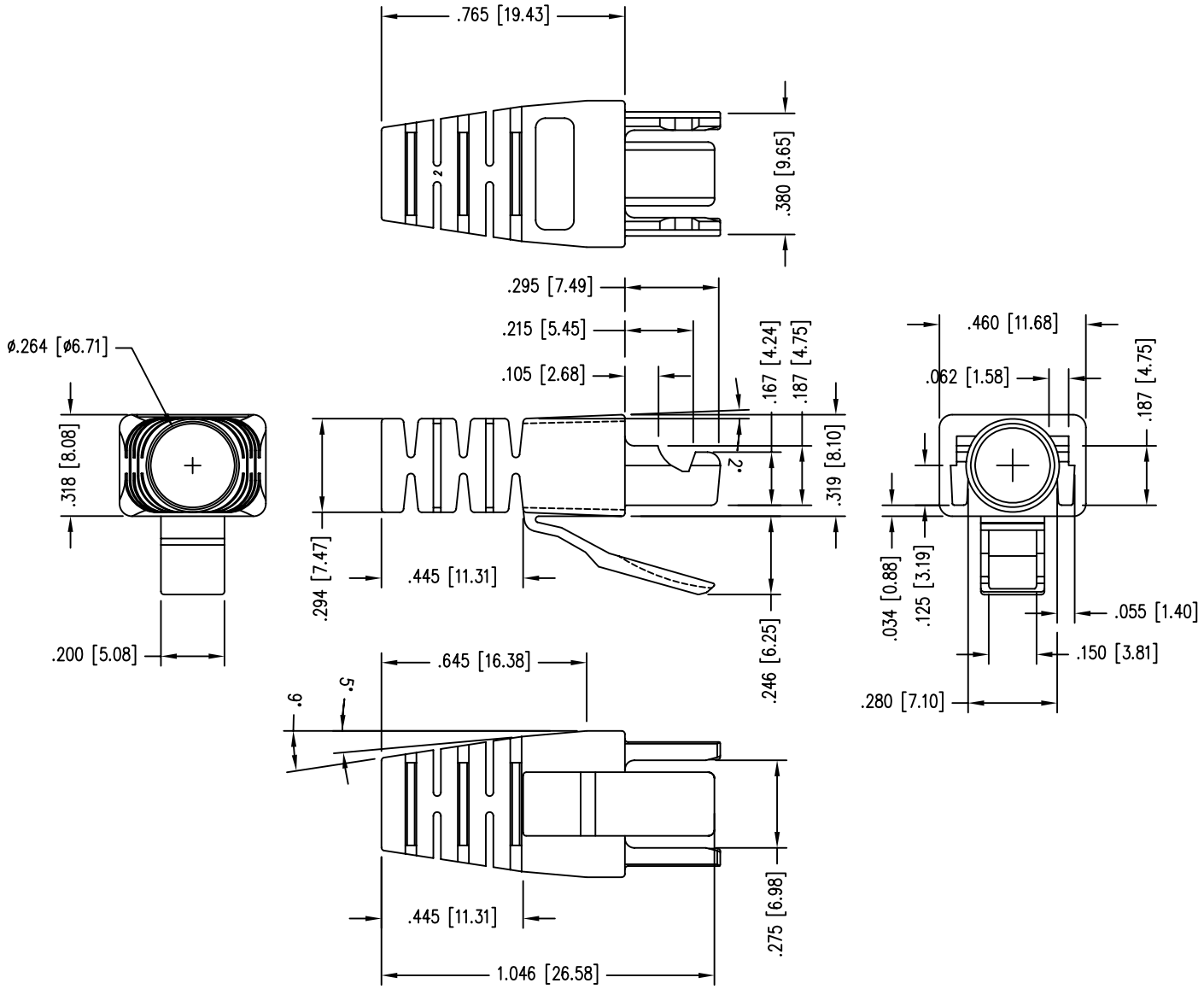

SPECIFICATIONS:

MATERIAL:	POLYCARBONATE - V0
OPERATING TEMPERATURE:	-40° TO +70° C
U.L. RECOGNIZED	File# E188111
FLAME AUTO EXTINGUISH	94-V0